N.SIR

Computerized Flat Knitting Machine

N.SIR®122/123/183

your choice SHIMA SEIKI

The Global Standard for Intarsia Knitting

SHIMA SEIKI's global standard for intarsia shaped knitting SIR®122 and 123 have undergone renewal. The new N.SIR®122, 123 and 183 inherit the know-how and experience accumulated over the years as the leading manufacturer of computerized flat knitting machines. High productivity is achieved with a lighter, more compact carriage combined with a maximum knitting speed of 1.4 meters per second and the R2CARRIAGE® System that improves efficiency in each course through quicker carriage returns. It also carries over proven SHIMA SEIKI technology such as our renowned Digital Stitch Control System (DSCS®), spring-type moveable sinker system, stitch presser, takedown comb and yarn gripper and cutter, as well as an all-new full-color LCD touch-sensitive control panel. Made-in-Japan quality, reliability, productivity, user-friendliness and cost-performance combine to satisfy the high expectations of the world's fashion industry.

Efficient Intarsia Knitting

Equipped with 21 intarsia carriers with an option for 30 total, N.SIR®123/183 allows great freedom in knitting intarsia garments, aided by tremendously capable design system software. Production leadtime can be dramatically reduced using the Automatic Intarsia Carrier Setting software featured on our SDS®-ONE APEX series 3D design system.

Rapid Response R2CARRIAGE®System

The R2CARRIAGE® (R2=Rapid Response) System features an advanced carriage mechanism combined with improved software programming that achieves quicker carriage returns after each course.

R2CARRIAGE®
RAPID RESPONSE CARRIAGE SYSTEM

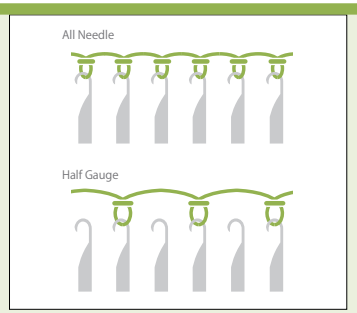

WideGauge® Knitting

Special knitting needles on N. SIR®122/123/183 V-type realize WideGauge® capability whereby a variety of gauges—from finer-gauges using all-needle knitting, to lower-gauges using half-gauge knitting—can be knit on a single machine. This allows the freedom to handle changing seasons and shifting trends without investing in a machine for every gauge or resorting to the complex, time-consuming task of gauge conversion. A wide range of production is possible, from tighter, finer-gauge fabrics using all-needle knitting to more airy, lower-gauge textures using half-gauge (1×1) knitting.

WIDEGAUGE®

The World's First Digital Stitch Device

Considered one of the most significant breakthroughs in modern-day knitting, our patented Digital Stitch Control System (DSCS®) is the only proven digital system field-tested and market-proven in the industry for 35 years. No other manufacturer can claim this kind of experience or level of refinement.

Control Monitor

N.SIR®122/123/183 feature an all-new full-color LCD touch-sensitive control panel with a larger screen that greatly improves on the previous monochromatic display. User-friendly menu-interactive function buttons permit easy input and editing as well.

N.SIR®122/123/183 DIMENSIONS

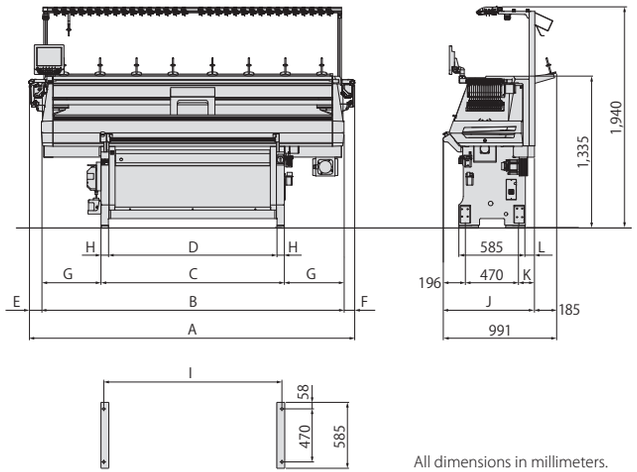

All dimensions in millimeters.

	A	B	C	D	E	F	G	H	I	J	K	L
N.SIR®122	2,419	2,346	1,610	1,470	38	35	368	70	1,560	806	140	83
N.SIR®123	2,860	2,656	1,610	1,470	110	94	523	70	1,560	806	140	83
N.SIR®183	3,470	3,266	2,240	2,080	110	94	513	80	2,180	832	166	109

Average Weight

N.SIR®122	795kg (1,749 lbs.)
N.SIR®123	845kg (1,859 lbs.)
N.SIR®183	1,100kg (2,420 lbs.)

Actual weight is dependent upon gauge and optional equipment.

SPECIFICATIONS

Type	NSIR122		NSIR123		NSIR183	
Variation	V	C	V	C	V	C
Gauge	5 · 7 · 12 · 14	7 · 12 · 14 · 16 · 18	5 · 7 · 12 · 14	7 · 12 · 14 · 16 · 18	12 · 14	12 · 14 · 16 · 18
Knitting width	Variable stroke. Max 48" (122cm)				Variable stroke. Max 72" (183cm)	
WideGauge®	Wide range of gauge knit on a single machine (V only).					
Knitting speed	Max 1.4m/sec. Knitting speed varies according to yarn, gauge and other knitting conditions. Speed can be programmed for 10 separate categories.					
Stitch density	120 levels, electronically controlled.					
Racking	Motor-driven. Max 1-inch racking to each side (2 inches total) (V5G: Max 6.5-pitch racking to left side and max 6-pitch racking to right side). 1/2 and1/4 pitch also available from any position.					
Knitting system	Double KNITRAN® system		Triple KNITRAN® system			
	Single carriage (R2CARRIAGE® system)					
Transfer	Simultaneous transfer, front or back, independent of carriage direction. Split stitch possible without exchanging yarn carriers.					
Sinker system	Spring-type moveable full-sinker system. Provides gentle holddown instead of forcibly pressing down yarn. v-Sinker™ standard on 14G, 16G and 18G.					
Stitch presser	Special motor-drive. On/off adjustment. Press-down amount can also be set according to knit, transfer, etc.					
Needle hook conversion	Conversion between LL-size and MM-size possible without exchanging cams (V7G, V12G, V14G only).					
Needle selection	Full jacquard selection via special solenoid actuators.					
Setup device	Takedown comb with special setup needles.					
Takedown device	Main/sub rollers. Changeable 99 levels, automatically adjustable on each level. Automatic opening and closing upon command.					
Yarn cutter	Single-unit system includes 1 yarn cutter and 2 yarn grippers. Lint remover.					
	Left side standard [1]		Both sides standard.			
DSCS®	Consistent loop length by digital control method. 8 lightweight, compact encoders. Left side standard.					
Yarn feed roller	10 positions on left side standard.10 positions on right side (V5G only) [2].		16 positions on each side			
	Left side double roller standard (V5G, C18G only).					
Yarn stopper device	-		8 positions on left side (C18G only).			
Side tensions	12 on each side.		16 on each side.			
	Brake disk with multi-step adjustable dials. Both sides standard.					
Yarn carriers	9 normal carriers + 1 plating carrier (accessory).[3,4]		2 normal carriers + 1 plating carrier (accessory) + 21 intarsia carriers. (30 max. intarsia carriers) [1].			
Top tension	16 units (V5G and V7G only: 24 units)		32 units			
	One-touch easy threading. Large knots cause machine stop. Small knots cause 0-9 courses at specified knot detection speed, then automatically resume at set speed.					
Stop motion	Yarn break, large knot, fabric pileup, shock detection, piece count, over-torque, program error, etc.					
Drive system	Belt drive. AC servo motor. No lubrication necessary.					
Cleaner	Special blower operated cleaner.					
Safety devices	Full safety cover for noise-suppression and dust-proofing with stop motion sensor and interlock mechanism. Emergency stop switch. Emergency power off device. Ultra-low speed "crawl" setting. CE Mark. Operation lamp (see below).					
Operation lamp	Green/normal operation. Flashing green/normal stop. Flashing amber/abnormal stop.					
CONTROLLER						
Data input	USB memory interface. Ethernet 10/100 BASE-T network interface.					
Pattern memory	25,165,824 bits (1,024 wales × 8,192 addresses)					
Control unit	Built-in controller. Stored program for flat knitting machine.					
Control display	10.4-inch color LCD touch panel (800 × 600 pixels). Editing possible via display panel operation. Help/Message function (for cleaning and lubrication). Available in English, French, Italian, Spanish, Portuguese, Turkish, Arabic, Russian, Vietnamese, Chinese, Korean and Japanese.					
Back-up power	Power supply for resuming knitting after power failure.					
Power	Single phase AC220V/230V (200V-250V)					
	2.0kVA (0.7～1.4kW: Power consumption varies according to gauge and knitting condition)		2.2kVA (0.8-1.4kW: Power consumption varies according to gauge and knitting condition.)			

OPTIONS: (1) Right side yarn cutter (2) Right side yarn feed rollers, 10 positions (V7G and C18G only) (3) Intarsia carriers (4) Additional intarsia carriers (max 21) (5) Additional intarsia carriers (max 30)

your choice SHIMA SEIKI

SHIMA SEIKI MFG., LTD.

85 Sakata Wakayama, 641-8511 JAPAN
TEL +81-73-474-8210 FAX +81-73-474-8270

www.shimaseiki.com

Website

Global network

Fully Fashioned High Speed Knitting Machine

ISO14001 Certification: SHIMA SEIKI Headquarters is certified as an ISO14001 accredited company.

SHIMA SEIKI, SDS, SDS-ONE, SDS-ONE APEX, SIR, v-Sinker, KNITRAN, R2CARRIAGE, WideGauge and DSCS are either registered trademarks or trademarks of SHIMA SEIKI MFG., LTD. in Japan and / or other countries. SHIMA SEIKI maintains a policy of continuous improvement for its products, and therefore specifications and appearances are subject to change without notice. Please contact your nearest authorized sales representative for the latest information.

SAFETY NOTICE In order to ensure safe operation of the equipment, please review all operation manuals carefully before use.

Featured cover sample: I1084S009、I1272S009、I1247S00M、I1271S009